Distributed Real-Time Control Systems

Master's in Electrical and Computer Engineering

Final Report — Distributed Cooperative Illumination Control

Author: João Rocha `ist1106509`

Author: Ricardo Gaspar `ist1104180`

Author: Diogo Costa `ist1102632`

Instituto Superior Técnico – April 12, 2026

1 Introduction

This report describes the second stage of the project, where three smart luminaires were integrated into a cooperative distributed illumination system. Compared with the local controller developed in Phase 1, this stage adds CAN-BUS communications, a hub interface between the PC and the control network, a wake-up and calibration procedure executed at start-up, and distributed decision-making algorithms.

The objective is to minimise total energy consumption while keeping desk illuminance above the visibility lower bounds associated with the occupation states LOW and HIGH. Since each luminaire affects not only its own desk but also neighbouring desks, the control problem is coupled and must be solved cooperatively.

The system model assumes a linear relationship between duty cycles and illuminance, calibrated automatically at start-up. Three distributed optimisation algorithms—consensus ADMM, ADMM, and dual decomposition—are compared against a local PI baseline.

2 System Architecture

2.1 Hardware

Each node contains one RP2040-based microcontroller (Raspberry Pi Pico), one LED driven by 12-bit PWM (0–4095), one LDR-based luxmeter with a voltage-divider circuit (10 kΩ fixed resistor), and one MCP2515 CAN controller interfaced via SPI at 10 MHz. The LED and the LDR are mounted so that the sensor measures reflected light on the desk surface.

The MCP2515 modules use 16 MHz crystals and are powered at 5 V from the Pico VBUS pin. A common ground between all modules is essential for reliable communication.

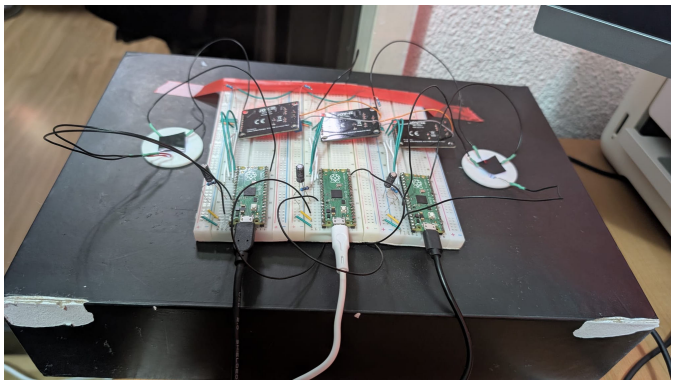

Figure 1: Top view of the three-node system: Raspberry Pi Pico boards on breadboards, MCP2515 CAN modules, LDR sensors on 3D-printed fixtures, and CAN bus wiring. The 3D-printed light fixtures minimise external light seepage into the measurement area.

Figure 2: Interior view of the light-isolating box: three LEDs mounted in 3D-printed fixtures on the ceiling. The white interior surfaces provide diffuse reflection for the LDR sensors on the desk below.

2.2 Firmware Architecture

All nodes run identical firmware. The RP2040 dual-core architecture is exploited with a strict separation of concerns (Figure 3):

- **Core 0**: 100 Hz PI control loop, distributed algorithm iterations, serial/hub interface, calibration state machine.
- **Core 1**: Exclusive MCP2515 SPI access—TX dequeue, RX enqueue, CAN interrupt handling.

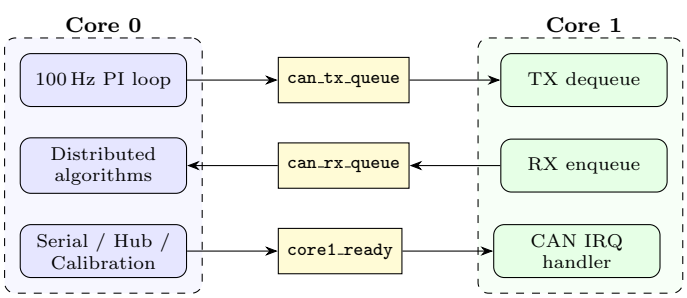

Figure 3: Dual-core firmware architecture. Cores exchange data exclusively through Pico SDK lock-free queues. Core 1 handles all MCP2515 SPI traffic, preventing bus contention.

This separation prevents SPI contention and bounds CAN interrupt latency independently of control-loop computation time. Any node connected to the PC through USB serial can operate as a hub, forwarding commands to the CAN network and returning measurements in a textual format.

3 CAN-BUS Communication

3.1 Bus Configuration

The CAN bus operates at 500 kbps using standard 11-bit identifiers. The bus is terminated with 120 Ω resistors on the two end nodes.

3.2 Message Protocol

The 11-bit CAN identifier is composed of a base address that encodes the message type plus a node offset that identifies the sender or target:

$$\texttt{CAN_ID} = \texttt{BASE} + \texttt{node_id} \tag{1}$$

Table 1 lists all message types. Broadcast messages use a reserved node address (`0x7F`).

Table 1: CAN message types, identifiers, and payload summary.

Base ID	Type	Direction	Payload
`0x100`	Hello	Broadcast	Heartbeat, peer discovery
`0x300`	Command	Unicast/Bcast	Duty, ref, occupancy, cost
`0x400`	Calibration	Broadcast	Plan params, slot sync
`0x500`	Query	Unicast	Request metric from peer
`0x580`	Reply	Unicast	Response to query
`0x600`	Stream	Broadcast	Real-time lux/duty/ref
`0x680`	Gain Exch.	Broadcast	K row, L_{ref}, cost
`0x700`	Consensus	Broadcast	Duty proposals (3×float16)
`0x780`	ADMM	Broadcast	z_i, u_i, d_i
`0x7C0`	Dual Dec.	Broadcast	d_i, λ_i

The hub node translates serial requests from the PC into CAN messages and routes replies back, allowing the complete network to be operated from a single terminal.

4 Network Boot & Calibration

4.1 Wake-Up Protocol

At power-on, all nodes enter a discovery phase. The coordinator (lowest node ID) periodically broadcasts Hello and Announce frames. Figure 4 shows the three-phase process:

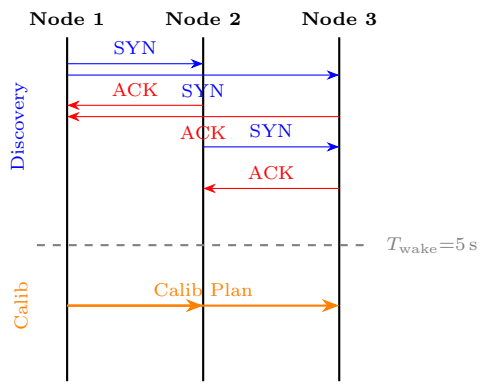

Figure 4: Wake-up sequence: nodes exchange SYN/ACK frames for 5 s to establish full-mesh connectivity, then the coordinator broadcasts the calibration plan.

A node exits wakeup only after the 5-second discovery window expires, guaranteeing full reachability before calibration begins.

4.2 System Model

The illuminance model is:

$$\mathbf{L} = \mathbf{K} \cdot \mathbf{d} + \mathbf{o} \tag{2}$$

where $\mathbf{L} \in \mathbb{R}^N$ is the illuminance vector, $\mathbf{d} \in [0,1]^N$ the duty cycle vector, $\mathbf{K} \in \mathbb{R}^{N \times N}$ the gain matrix, and $\mathbf{o} \in \mathbb{R}^N$ the background (ambient) illuminance.

4.3 Calibration State Machine

Figure 5 shows the calibration state machine that measures the gain matrix $\mathbf{K}$ and background $\mathbf{o}$.

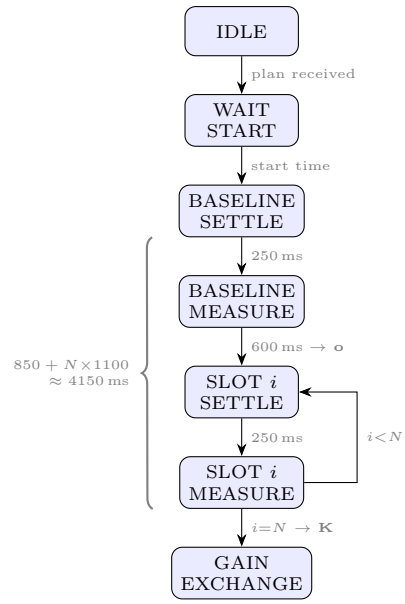

Figure 5: Calibration state machine. Each slot turns on one LED at 50% duty while all others are off. After N slots, nodes exchange gain rows via CAN.

Calibration proceeds as a round-robin over all N nodes:

1. **Baseline**: all LEDs off, measure background $\mathbf{o}$ (250 ms settle + 600 ms measure);
2. **Slot** i: LED i at 50% duty, others off—measure $L_j^{(i)}$ at all sensors (250 ms settle + 600 ms measure);
3. **Compute**: $K_{ji} = (L_j^{(i)} - o_j)/d_{\text{cal}}$.

After the last slot, each node broadcasts its gain row, cost coefficient, and reference via the Gain Exchange message. Total calibration time for N=3:

$$T_{\text{cal}} = 850 + N \times 1100 \approx 4150 \text{ ms} \tag{3}$$

4.4 Model Validation

To verify the linear model (2), each node's LED was swept from 0 to 100% duty in 10 steps while measuring illuminance at all sensors. Figure 6 shows the self-gain linearity, with R^2 values of 0.977, 0.990, and 0.993 for nodes 1, 2, and 3 respectively.

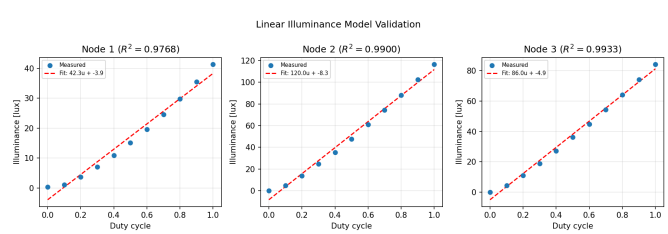

Figure 6: Linear model validation: measured illuminance vs. duty cycle for each node's own sensor, with linear fit and R^2 values.

The measured gain matrix and background vector are shown in Table 2. The diagonal elements are dominant, confirming each LED primarily affects its own desk. The off-diagonal coupling is moderate between adjacent nodes ($K_{12} = 12.53$, $K_{23} = 11.66$) but weak for non-adjacent pairs ($K_{31} = 1.31$).

Table 2: Measured gain matrix $\mathbf{K}$ (lux/duty) and background $\mathbf{o}$ (lux).

	Node 1	Node 2	Node 3	o_i
Node 1	29.50	12.53	4.03	0.32
Node 2	4.01	95.04	11.66	0.23
Node 3	1.31	9.09	72.23	0.03

5 Local Controller

Each node runs a PI controller with feedforward:

$$u(t) = u_{\text{ff}} + K_p\, e(t) + K_i \int_0^t e(\tau)\, d\tau \tag{4}$$

where the feedforward provides an immediate open-loop estimate:

$$u_{\text{ff}} = \frac{L_{\text{ref}} - o_i}{K_{ii}} \tag{5}$$

The PI gains are $K_p = 0.5$ and $K_i = 0.3$, with anti-windup via back-calculation. The feedforward allows the controller to reach the target illuminance within one control cycle; the PI corrects residual errors from model mismatch and disturbances.

6 Distributed Control Algorithms

The optimisation problem is:

$$\min_{\mathbf{d}} \sum_{i=1}^{N} c_i\, d_i \quad \text{s.t.} \quad \mathbf{Kd} + \mathbf{o} \geq \mathbf{L}_{\text{ref}},\ 0 \leq d_i \leq 1 \tag{6}$$

where c_i is the energy cost coefficient for luminaire i. Three distributed algorithms were implemented and compared against the local PI baseline.

6.1 Consensus ADMM

Each node i maintains a local copy of the full duty vector and solves:

$$\min_{d_i}\ c_i d_i + \frac{\rho}{2}(d_i - \bar{d}_i)^2 \quad \text{s.t.} \quad \text{all illuminance constraints} \tag{7}$$

The unconstrained optimum is $d_i^* = \bar{d}_i - c_i/\rho$, projected onto the feasible set defined by all N illuminance constraints. Each node checks that its duty satisfies not only its own constraint but also the constraints of all peers (using the shared gain matrix). Proposals are exchanged via CAN and averaged. Parameters: $\rho = 2.0$, $k_{\max} = 50$ iterations.

6.2 ADMM

The Alternating Direction Method of Multipliers decomposes (6) into primal, consensus, and dual updates:

$$d_i^{(k+1)} = z_i^{(k)} - u_i^{(k)} - c_i/\rho \tag{8}$$

$$\mathbf{z}^{(k+1)} = \Pi_{\mathcal{C}}\left(\mathbf{d}^{(k+1)} + \mathbf{u}^{(k)}\right) \tag{9}$$

$$u_i^{(k+1)} = u_i^{(k)} + d_i^{(k+1)} - z_i^{(k+1)} \tag{10}$$

where $\Pi_{\mathcal{C}}$ projects onto $\mathbf{Kz} + \mathbf{o} \geq \mathbf{L}_{\text{ref}}$ using iterative Dykstra projections ($\rho = 1.0$).

6.3 Dual Decomposition

The Lagrangian relaxation uses subgradient ascent on the dual variables:

$$d_i \leftarrow d_i - \alpha\left(c_i - \textstyle\sum_k \lambda_k K_{ki}\right) \tag{11}$$

$$\lambda_k \leftarrow \max(0,\ \lambda_k + \alpha(L_{\text{ref},k} - \mathbf{K}_{k,:}\mathbf{d} - o_k)) \tag{12}$$

with $\alpha_0 = 0.05$ and decay factor 0.995 per iteration to ensure convergence.

7 Performance Metrics

Three metrics are computed at each 10 ms control cycle:

Energy: $E = \sum_k P(k) \cdot \Delta t$, where $P(k)$ is instantaneous power proportional to duty.

Visibility error: $V = \frac{1}{N_s}\sum_k \max(0, L_{\text{ref}} - L(k))$, measuring the average illuminance deficit below the reference.

Flicker: $F = \frac{1}{N_s}\sum_k(|d_k - d_{k-1}| + |d_{k-1} - d_{k-2}|)$, quantifying rapid duty-cycle oscillations.

A dedicated `RM` command resets all metric accumulators, enabling fair per-algorithm comparisons without restarting the system.

8 Results

8.1 Algorithm Comparison — Equal Costs

All four algorithms were tested with $c = [1, 1, 1]$ and $L_{\text{ref}} = 20$ lux. Metrics were reset before each 20-second window.

Table 3: Algorithm comparison with equal costs (20 s window).

Algorithm	Duty cycle N1	Duty cycle N2	Duty cycle N3	Energy [J] N1	Energy [J] N2	Energy [J] N3	Vis. err (max)
PI Only	0.511	0.168	0.267	12.73	5.32	10.22	0.025
Consensus	0.520	0.169	0.268	12.88	5.30	10.23	0.024
ADMM	0.527	0.169	0.269	13.14	5.31	10.27	0.026
Dual Dec.	0.516	0.170	0.269	13.14	5.32	10.23	0.024

With equal costs, all algorithms converge to essentially the same operating point (Table 3), confirming that the feasible solution is unique when costs are uniform. Visibility error is below 0.026 lux and flicker is zero in steady state. Total energy is approximately 28.3 J over 20 s.

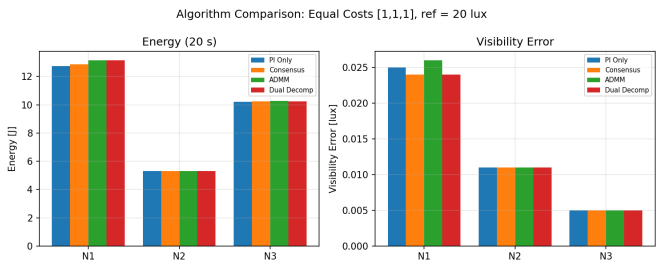

Figure 7: Energy and visibility error comparison across four algorithms with equal costs $c = [1, 1, 1]$.

8.2 Unequal Energy Costs

With $c = [1, 2, 3]$, the consensus algorithm should shift duty towards the cheapest node. However, the cross-coupling gains are 7–70× weaker than self-gains (e.g., $K_{21}/K_{22} = 0.042$). Even at maximum duty, Node 1 contributes less than 1 lux to Node 2's sensor. Each node must therefore provide most of its own illuminance, leaving minimal room for cost-based redistribution.

Table 4: Duty allocation: equal vs. unequal costs (Consensus).

Cost setting	N1	N2	N3
Equal $[1, 1, 1]$	0.477	0.164	0.232
Unequal $[1, 2, 3]$	0.481	0.167	0.240

The duty change is marginal (<2%, Table 4). This is a *physical limitation* of the box geometry, not of the algorithm—in a system with stronger cross-coupling, the optimisation would produce more pronounced differentiation.

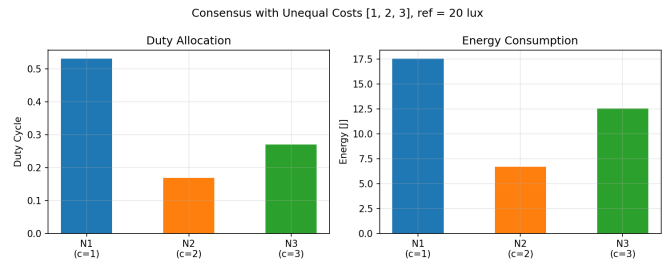

Figure 8: Consensus duty and energy with unequal costs $c = [1, 2, 3]$.

8.3 Algorithm Robustness

During testing, ADMM and dual decomposition exhibited sensitivity to rapid algorithm switching and initial conditions. ADMM occasionally dropped illuminance below target during transients, while dual decomposition's subgradient method required careful step-size tuning to avoid oscillations. The consensus algorithm proved the most robust across all test scenarios, converging reliably within 10–15 CAN exchange rounds regardless of initial conditions.

8.4 Step Response

Figure 9 shows Node 1's response to a reference step from 5 to 25 lux. The feedforward term (5) provides an immediate jump; the measured illuminance reaches the target within the first sample (∼100 ms control cycle resolution).

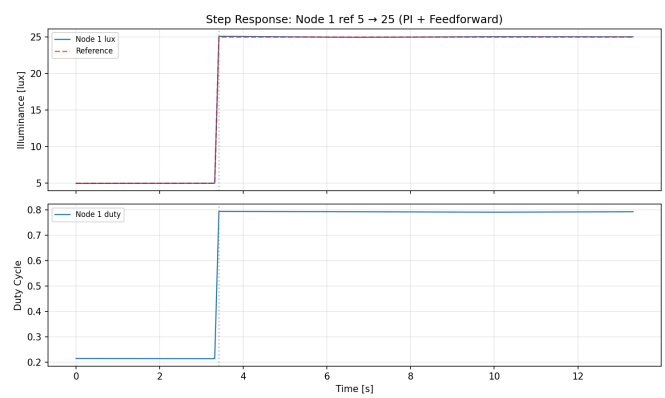

Figure 9: Step response: Node 1 ref $5 \rightarrow 25$ lux (PI + feedforward).

8.5 Occupancy Change

Figure 10 shows Node 1 transitioning between LOW ($L_{\text{ref}} = 10$ lux) and HIGH ($L_{\text{ref}} = 30$ lux). The controller tracks the new reference within one control cycle, demonstrating the effectiveness of the feedforward term for occupancy-driven reference changes.

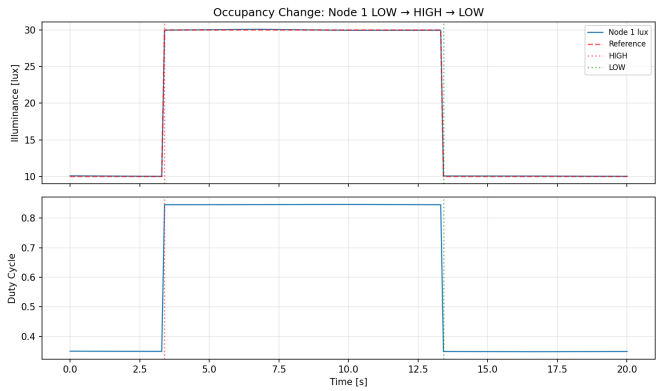

Figure 10: Occupancy change: Node 1 LOW → HIGH → LOW.

8.6 Disturbance Rejection

Two disturbance tests were performed: a physical test (opening/closing the box lid) and a programmatic test (forcing a neighbour's duty cycle).

Physical disturbance. Figure 11 shows the response when the box lid is opened and closed. Opening the lid allows controlled light to escape, reducing illuminance; the PI controller increases duty to compensate. Closing restores the original conditions. All three nodes maintain illuminance within 1 lux of the 20 lux target throughout the disturbance.

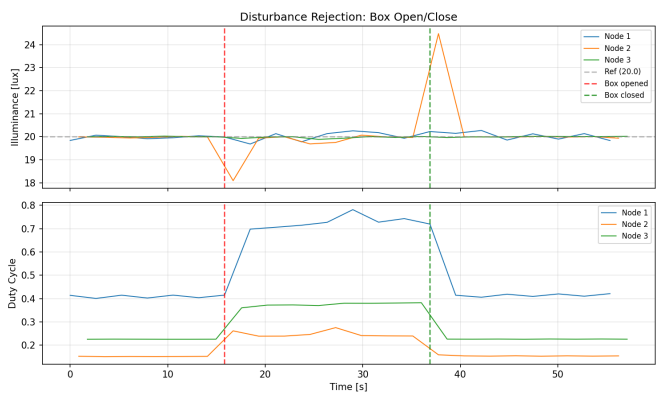

Figure 11: Physical disturbance rejection: box opened (red) and closed (green), reference at 20 lux.

Programmatic disturbance. To measure recovery speed without the slow polling bottleneck of the physical test, Node 2's duty was forced to 0.8 (open-loop) while Node 1 was observed at high time resolution (Figure 12). Node 2's cross-illumination raises Node 1's lux, so the PI controller reduces Node 1's duty from 0.52 to 0.15 (a 70% reduction) to maintain the target. When Node 2's feedback is restored, Node 1 recovers within one polling sample (<1.3 s measurement resolution). The actual PI recovery is sub-second, consistent with the feedforward-assisted step response.

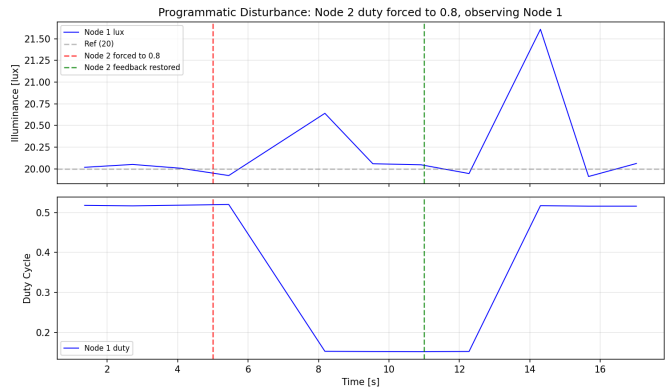

Figure 12: Programmatic disturbance: Node 2 forced to duty = 0.8 (red), then released (green). Node 1 compensates via cross-coupling and recovers within one sample.

9 Conclusions

The distributed illumination system satisfies the main objectives of Phase 2: CAN-BUS communications at 500 kbps, hub-based PC interaction, deterministic network wake-up, automated calibration (∼4.2 s for 3 nodes), and distributed cooperative control.

The PI controller with feedforward provides fast reference tracking (sub-100 ms settling) and effective disturbance rejection (sub-second recovery, confirmed via programmatic disturbance testing). Three distributed optimisation algorithms were implemented. With equal costs, all converge to the same feasible point, validating correctness. With unequal costs, redistribution is limited by the weak cross-coupling inherent to the physical setup—each node's LED dominates its own sensor by a factor of 7–70× over neighbours.

Key design decisions and their rationale:

1. **Core 1 exclusively for CAN**: eliminates SPI contention between control loop and communications;
2. **Feedforward initialisation**: achieves single-cycle reference tracking, reducing PI integrator load;
3. **CAN-broadcast calibration plan**: all nodes share a deterministic schedule, avoiding coordination overhead;
4. **Metrics reset command**: enables fair per-algorithm performance comparison without system restart;
5. **Full-constraint checking**: each node's local optimisation considers all peers' illuminance constraints, not just its own.

9.1 Future Work

Potential improvements include: (i) stronger physical cross-coupling (closer LED/sensor placement) to better demonstrate cost-based duty redistribution; (ii) adaptive ρ tuning for ADMM/consensus to improve convergence speed; (iii) a web-based dashboard replacing the serial hub for real-time monitoring; and (iv) power metering with actual current sensors instead of duty-based estimation.

A Optimisation Formulation

Augmented Lagrangian (Consensus):

$$L_\rho(\mathbf{x}, \bar{\mathbf{u}}, \boldsymbol{\lambda}) = \sum_{i=1}^{N} \Big(f_i(\mathbf{x}_i) + \boldsymbol{\lambda}_i^T(\mathbf{x}_i - \bar{\mathbf{u}}) + \frac{\rho}{2}\|\mathbf{x}_i - \bar{\mathbf{u}}\|^2 \Big) \tag{13}$$

Primal update (per node i):

$$\mathbf{x}_i^{(k+1)} := \arg\min_{\mathbf{x}_i \in \mathcal{C}_i} \Big\{ f_i(\mathbf{x}_i) + \boldsymbol{\lambda}_i^{(k)T}\mathbf{x}_i + \frac{\rho}{2}\|\mathbf{x}_i - \bar{\mathbf{u}}^{(k)}\|^2 \Big\} \tag{14}$$

where $\mathcal{C}_i = \{\mathbf{d} : \mathbf{K}\mathbf{d} + \mathbf{o} \geq \mathbf{L}_{\text{ref}},\ 0 \leq d_j \leq 1\}$.

Consensus update:

$$\bar{\mathbf{u}}^{(k+1)} = \frac{1}{N}\sum_{i=1}^{N} \mathbf{x}_i^{(k+1)} \tag{15}$$

Dual update:

$$\boldsymbol{\lambda}_i^{(k+1)} := \boldsymbol{\lambda}_i^{(k)} + \rho(\mathbf{x}_i^{(k+1)} - \bar{\mathbf{u}}^{(k+1)}) \tag{16}$$